Infinitum

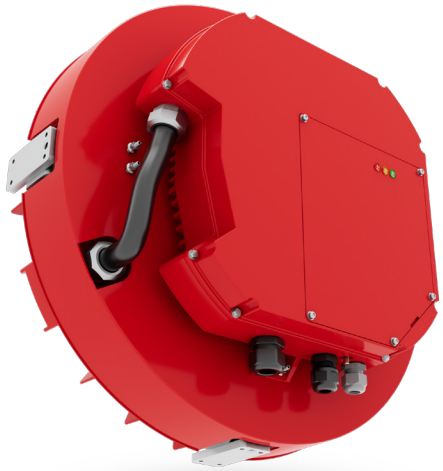

Aircore EC+

Installation, Operation, & Maintenance Manual

Release: Gen 4.2, AFE

Date: October 2026

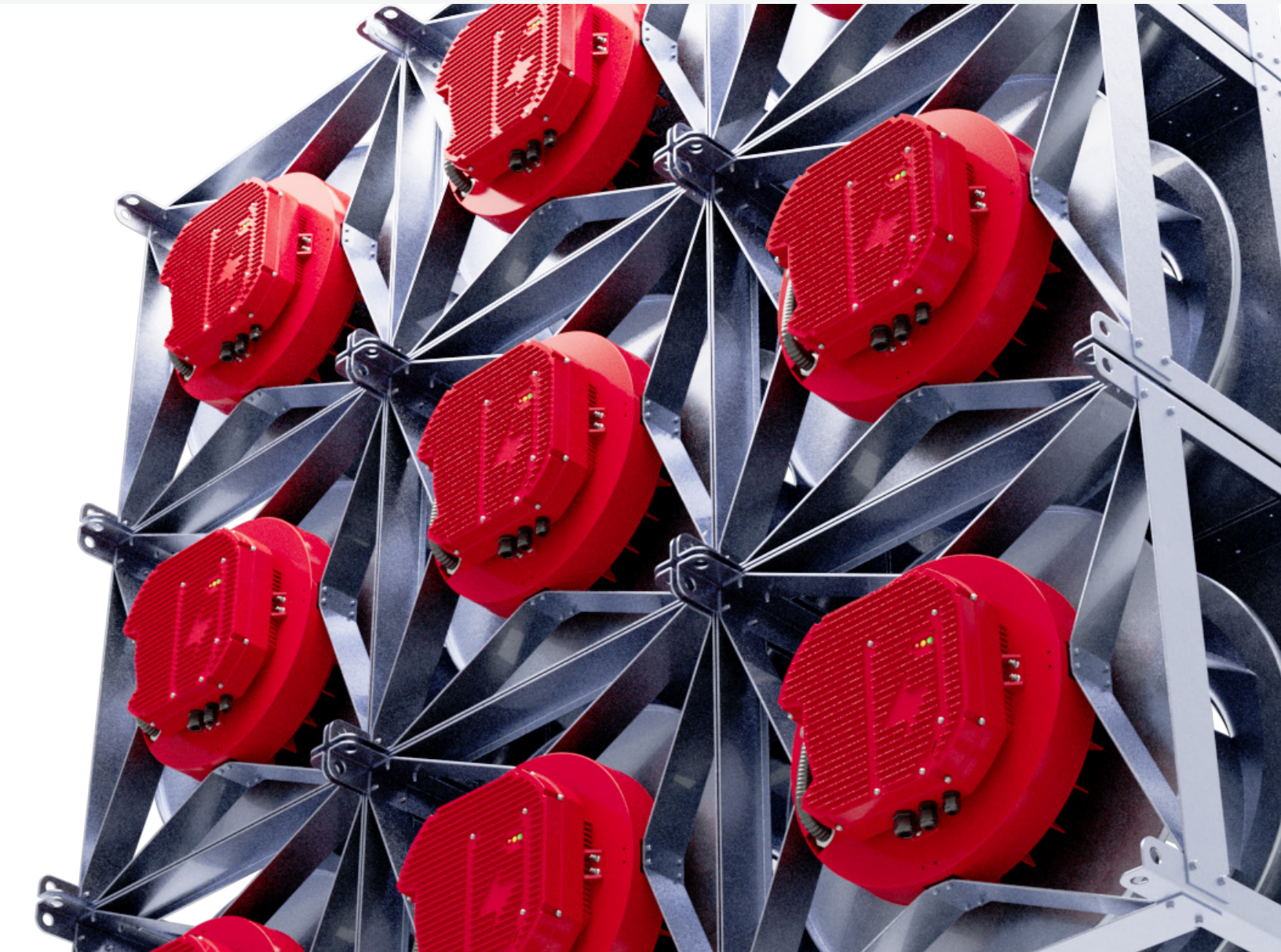

1 Safety information

This section includes safety guidelines you must adhere to when installing, operating, and servicing the Aircore EC+ motor. Ignoring safety precautions risks bodily harm, loss of life, or damage to the Aircore EC+ motor and its associated equipment. Read all safety instructions before you work on the motor.

1.1 Warnings, cautions, and notices

Warnings, cautions, and notices are throughout the manual to alert the technician of a potential hazard or process information. The following symbols are used in this manual.

WARNING: Indicates a hazardous situation which, if not avoided, could result in serious injury or death.

CAUTION: Indicates a hazardous situation which, if not avoided, could result in minor injury or damage to the equipment.

NOTICE: Indicates information that can aid in the completion of a process or step, but is not safety related.

Table of Contents

1. Safety information **2**
- 1.1 Warnings, cautions, and notices 2

2. Revision history **4**

3. Introduction **5**
- 3.1 Purpose 5

4. Receiving, handling, and storage **5**
- 4.1 Inspect package 6
- 4.2 Remove motor from crate 6
- 4.3 Transport motor 7
- 4.4 Support and flip assembly 7
- 4.5 Compare nameplate data 8
- 4.6 Confirm catalog number 8
- 4.7 Rotate motor output shaft 9
- 4.8 Ready spare storage 9
- 4.8.1 Motor bearings 9
- 4.8.2 Scheduled output shaft rotation 9

5. Motor installation **9**
- 5.1 Preparation 9
- 5.1.1 Operating ambient temperature 9
- 5.1.2 Ingress protection 10
- 5.2 Mechanical installation 10
- 5.2.1 Location 10
- 5.2.2 Orientation 10
- 5.2.3 Mounting 10
- 5.2.4 Alignment 11
- 5.3 Electrical installation 11
- 5.3.1 Motor connection requirements 11
- 5.3.2 Motor control connections 12
- 5.3.3 Ground circuit verification 12
- 5.3.4 Grounding configurations 12
- 5.3.5 Motor connection locations 12
- 5.3.6 Connector size and terminal data 13
- 5.3.7 Circuit breaker and wire sizing 13
- 5.3.8 Aircore EC+ control configurations 14
- 5.3.9 CIM-CIO AFE control configurations 16
- 5.3.10 LED operation 17
- 5.4 Motor testing 17
- 5.4.1 Check motor rotation 17
- 5.4.2 Connect motor to driven equipment 17
- 5.5 Software control 18

6. Maintenance **18**
- 6.1 Maintenance tasks 18
- 6.2 Mechanical issues 19
- 6.3 Windmilling 19

7. Drive parameters and data types **19**

8. Related documents **19**

9. Troubleshooting guide **20**

Appendix **22**
- Technical specifications 22
- Motor dimensions 23

2 Revision history

Release	Date	Changes
1.2	October 2026	Added 18-terminal CIM-CIO board image, connector size, and terminal data. Corrected altitude power derate. Refer to PN# 26-10.
1.1	June 2026	Updated visual inspection procedure, added visual inspection frequency table, added additional voltage table for 3-phase 575VAC, layout changes, expanded content, product name change to consolidate Aircore EC and Mission Critical names into Aircore EC+ platform name.
1	October 2025	Initial release

3 Introduction

Infinitum has developed a new generation of electric motors with unparalleled efficiency and durability. We've reinvented axial air-core motors (Figure 1) using lightweight materials and a modular design that generates the same power with less weight than a legacy motor. These motors include an optimized Variable Frequency Drive (VFD) for maximum performance and efficiency at a wide operating range.

Figure 1: Aircore EC+ motor components

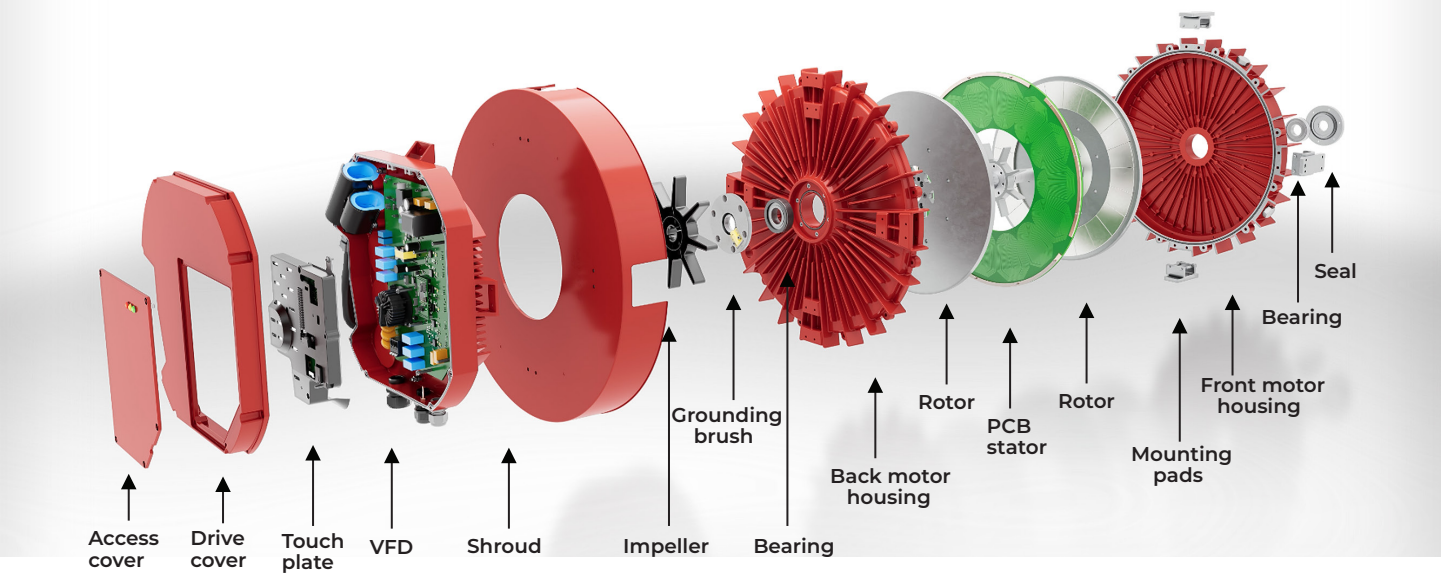

Both traditional motors and Infinitum motors have a stator. However, the Aircore EC+ stator is a Printed Circuit Board (PCB) rather than a heavy iron core with copper windings. The Infinitum motor is designed utilizing a PCB stator sandwiched between two rotors (Figure 2). Permanent magnets are attached to the surface of the two rotors. Since there is no iron in the magnetic path, the motor is classified as an air-core design.

Infinitum also has an established ecosystem of configuration software (I-con control software) for real-time monitoring and analytics.

Figure 2: Aircore EC+ stator

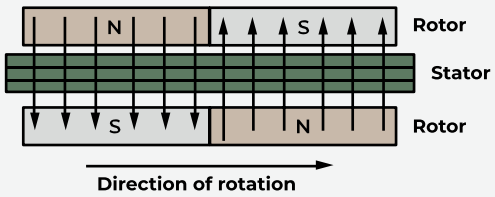

3.1 Purpose

This manual provides guidance for the installation, operation, and servicing of the Aircore EC+ motor. The manual contains comprehensive information on safety instructions, receiving and storage, installation and wiring, maintenance and troubleshooting, and technical specifications.

4 Receiving, handling, and storage

Review all appropriate sections prior to motor installation. The motor is shipped in a one or four motor palletized container. The container and motor can be moved by using a dolly, pallet jack, or fork truck.

4.1 Inspect package

Inspect the motor packing for damage that may have occurred during shipping. If the package is damaged, remove the packing and inspect the motor for damage. Motor damage from shipping must be reported to the shipper.

4.2 Remove motor from crate

WARNING: The motor is provided with two mounting brackets with threaded holes for a lifting lug (eyebolts). Lifting lugs may or may not be shipped with the motor. The lugs are intended to lift the motor assembly only. Attaching additional components will exceed the design weight limits. To reduce the possibility of personal injury or death, lift the motor only, make sure the lugs are completely threaded into the brackets, and ensure they do not rotate out during lifting. Lifting eye-bolts have M10x1.5 thread, 20mm shank or 1/2”-13 thread, 1 1/2” shank length, depending on the motor. Consult the appropriate motor drawing to be sure.

To reduce the possibility of personal injury and equipment damage, only use a lifting device and straps that are rated for the motor weight. Do not lift the motor without mechanical assistance. Always inspect straps for damage and weight certification prior to use.

Use an approved lifting device to remove the motor from the packing crate.

To remove the motor from the crate:

Step 1: Remove packing material

Remove the top of the packing crate and remove the packing material from around the motor and mounting brackets.

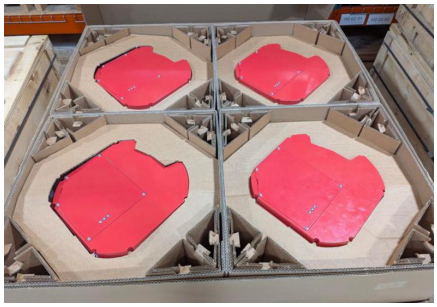

Step 2: Install lifting lugs

Install lifting lugs (eye-bolts) to (2) of the mounting brackets on either side of the motor (180 degrees apart). Make sure the lugs are completely threaded into the motor housing.

NOTICE: Lifting lugs are M10x1.5 thread, 20mm shank or ½”-13 thread, 11/2” shank length depending on the motor. Consult the appropriate motor drawing to be sure.

Step 3: Position lifting device and attach sling

Position the lifting device above the motor and attach the sling to each lifting lug.

Step 4: Lift motor out of the crate

Lift the motor vertically and keep the shaft unloaded.

Step 5: Position motor and lower motor onto cart

Slowly move the lifting device horizontally until it is positioned over a support cart. Lower the motor onto the support cart so it is resting on the C-face and not the shaft.

CAUTION!

Do not lift or rest the motor on the shaft.

Do not slide, spin, or roll the motor onto the drive without a rubber mat or other protective material placed under the drive to protect the light pipes and finish.

4.3 Transport motor

When transporting a motor within the production facility, follow the instructions outlined below.

✓ DO		⊘ DO NOT
• Transport motors shaft down only if they are fully supported (C-face through cart opening or supported by 2x4s).	• Secure motors to prevent shifting during transportation.	• Allow the motor's weight to rest on the shaft. • Let motors contact hard surfaces without protection.

4.4 Support and flip assembly

Before working on the motor and assembly, make sure the assembly is properly supported using a fixture or stand.

✓ DO		⊘ DO NOT
• Support assemblies during flips so no weight is carried by the shaft or equipment coupled to and supported by the motor shaft. • Use fixtures or stands whenever possible.		• Rest the full motor or assembly weight on the wheel or shaft. • Step on the wheel or fan for balance when entering/exiting the unit.

4.5 Compare nameplate data

Verify receipt of the proper motor:

- Compare data on the nameplate (Figure 3) with the purchase order. Labels are on the motor shroud.
- Compare data on the nameplate for the desired power supply and control equipment requirements.

Figure 3: Nameplate

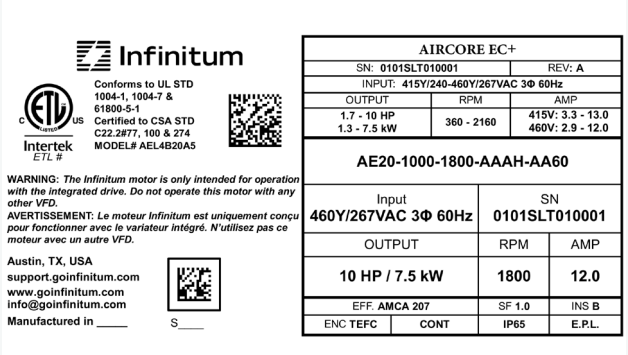

4.6 Confirm catalog number

Infinitum Aircore EC+ motors are ordered with catalog numbers using a decoder scheme (Figure 4).

Figure 4: Catalog number decoder

Example: AE13-0590-1225-AAAH-AA63

Family	Frame	Rated Power	Rated Speed	Product Code Voltage	Product Communication	Product Code VFD	Product Code Bearings	Product Code Shaft	Product Code Cable Harness	Product Ingress Protection	Product Code Misc.
XX	XX	XXXX	XXXX	X	X	X	X	X	X	X	X
AE, AM[1]	13, 15, 18, 20	0590[2]	1225[2]	**A** 415V/460V/60Hz **C**[3] 575V/60Hz	**A** MODBUS RTU & Analog **B** BACnet MS/TP & Analog	**A** All features/ Default parameters	**H** Hybrid Ceramic[4]	**A** 3.3", D 1.13" **B** L4.0, D 1.13"	**A** None	**6** IP65[5]	**0** Ground Wye, EP-L 3 Grounded Wye, HRG, Delta, EP-L

1 AM motors include Active Front End (AFE) technology.
2 Rated Power and Rated Speed have custom and standard options. Check the MST for all options. 15 HP motors are not available with AFE technology.
3 575VAC motors are not compatible with Grounded Wye.
4 Steel bearings discontinued as of June 2026.
5 IP54 discontinued as of June 2026.

Note: For the most recent version, contact Infinitum or check the MST.

4.7 Rotate motor output shaft

WARNING: The rotor in this motor incorporates a Permanent Magnet (PM) design. When the rotor is rotated, a voltage is produced in the stator even when the motor is disconnected from a power source. Do not open electrical compartments or touch unprotected terminals while the rotor is turning.

Disconnect motor supply power and allow one minute for capacitors to discharge before servicing or replacing. Failure to comply with rotor safety procedures can cause serious injury or death and equipment damage.

Make sure all motor wire connections are properly terminated and insulated. Turn motor rotor (output shaft) by hand. It should turn freely with some drag from the bearing seals.

4.8 Ready spare storage

Motors purchased for ready spares are not placed into service immediately. These motors should be stored in a clean, dry space. Avoid spaces with large temperature swings to reduce condensation. Storage temperature is -40 to 185 °F (-40 to 85 °C).

Cover motors to prevent airborne dust and dirt particles. If the storage area location is prone to vibration, place vibration dampers under the motor base to prevent premature wear and damage to the bearings.

4.8.1 Motor bearings

The bearings used in this motor are lubricated and sealed at the factory. The motor does not require bearing lubrication in the field or during storage.

4.8.2 Scheduled output shaft rotation

WARNING: The rotor in this motor incorporates a Permanent Magnet (PM) design. When the rotor is rotated a voltage is produced in the stator even when the motor is disconnected from a power source. Do not open electrical compartments or touch unprotected terminals while the rotor is turning.

Disconnect motor supply power and allow one minute for capacitors to discharge before servicing or replacing. Failure to comply with rotor safety procedures can cause serious injury or death and equipment damage.

It is recommended that the rotor (output shaft) be rotated five to ten times every quarter (three months). This distributes grease in the bearings and reduces the chance of corrosion on bearing rolling elements and raceways. Bearing seals can add some resistance to turning the rotor.

5 Motor installation

5.1 Preparation

Review this entire manual prior to scheduling the motor installation. All equipment related to systems operation must be secured and have an active LOTO (Lock Out Tag Out) procedure in accordance with application specific safety policies. All users should be notified of the equipment outage.

5.1.1 Operating ambient temperature

The ambient temperature of the air supplied to the motor cooling inlet should not exceed 40° C (104° F) or be less than -25° C (-13° F). Power can be derated at higher temperatures by 2% per degree C up to 50° C. Use the Infinitum Motor Selection Tool to confirm derating details. Consult Infinitum for ambient temperatures not within these requirements.

Occasional start-up at temperatures below -25°C is permitted under certain conditions. For continuous operation at ambient temperatures below -25°C, special low-temperature bearings are required. Contact Infinitum for any application below -25°C ambient.

5.1.2 Ingress protection

Infinitum motor Ingress Protection (IP) ratings are identified by their respective nameplates. To maintain this IP rating, cable glands or seals must be used at all wiring ports and all gaskets in place with covers.

5.2 Mechanical installation

This section covers location, orientation, alignment, and mounting options for the Aircore EC+ motor. Dimensions for each frame size are included in the Appendix: Motor dimensions.

5.2.1 Location

WARNING: This motor is not certified to operate in any hazardous environments. Operating a motor in areas contaminated with explosive gases can cause explosions, resulting in serious injury or death and equipment damage.

- Electric motors have guidelines for their location and operating environment. These guidelines are listed below:
- The motor should be located in a ventilated enclosure and should be in an area that allows air circulation.
- Air cooling inlets and outlets must not be obstructed.
- The enclosure cannot be located in an area with harmful or explosive gases.
- The area should be free from dust and metallic particles.
- The motor should be easily accessed for cleaning and maintenance.

5.2.2 Orientation

Gen4 Aircore EC+ motors can be used in any orientation: horizontal, shaft up, or shaft down.

5.2.3 Mounting

The Aircore EC+ motor system is supplied with an integrated VFD. The motor and drive are the major components of the assembly. Refer to Appendix: Technical specifications for a motor component drawing.

5.2.3.1 Mounting options

Driven equipment (for example, a fan wheel) should be mounted to the shaft using as much of the available shaft length as possible. A shaft key-way and shaft key are provided for secure coupling of hubs to the shaft.

There are two mounting options for the motor: peripheral mounting or C-face mounting.

a. Peripheral mounting block

There are four mounting blocks (if ordered) on the surface of the motor, spaced at 90° intervals (Figure 5). Each block has provisions for a lifting lug (eye-bolt) that can be used to lift the motor, and mounting holes at the drive end (DE) face and transverse surface.

Figure 5: Circumference mounting pads and shaft keyway

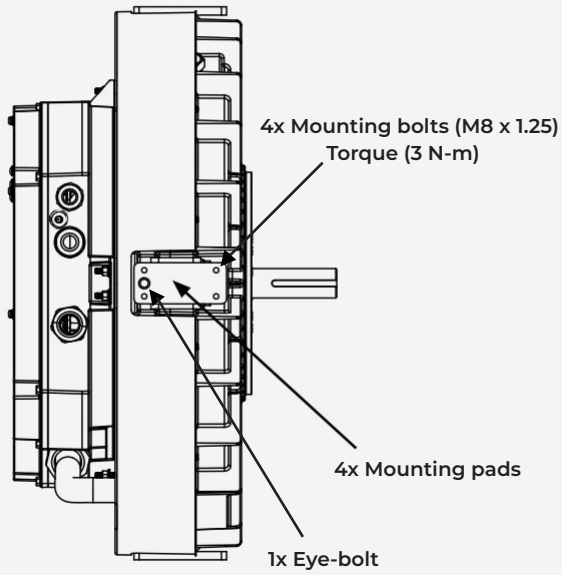

The transverse face of the mounting block has threaded holes for four mounting bolts (M8X1.25). All four mounting bolts should be installed for secure motor mounting.

b. C-face mounting

Infinitum Aircore EC+ motors are not a NEMA standard frame size but utilize a NEMA 182TC faceplate mounting configuration.

The DE face of the mounting block has threaded holes for four bolts (M12X1.25). All bolts should be used for secure mounting of the motor to the equipment (Figure 6).

CAUTION: Use care when installing the driven equipment onto the rotor shaft. Do not force the hub or coupling onto the shaft, as this may damage the motor bearings. If the hub or coupling does not slide without resistance, check the alignment of the equipment with the rotor shaft.

Maintain adequate clearance between the front of the motor body and the equipment to prevent mechanical obstruction that may cause damage or injury.

The motor and stator assembly must be mounted on a structure that will support the operational weight of the motor and drive. Using vibration dampers at motor assembly mounts to reduce motor vibration is recommended. Align the motor output shaft centerline with the driven component and install mounting hardware, but do not tighten. This is completed by the alignment process.

Figure 6: DE face

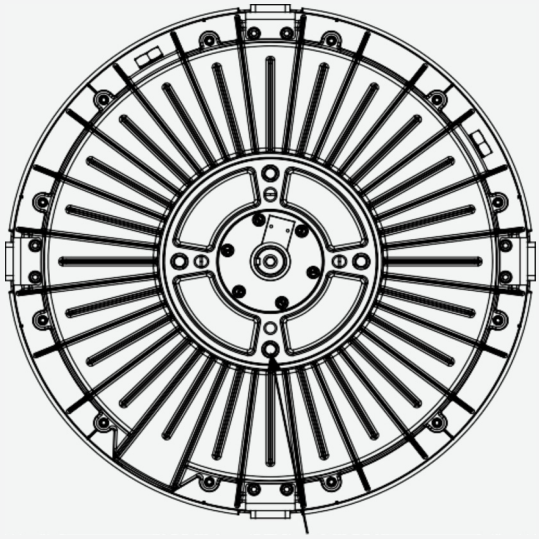

4x C-face Mounting bolts (M12x 1.25)

5.2.4 Alignment

The motor may be directly mounted to equipment such as fan wheels or may be connected through a belt or pulley system. It may also be attached through a shaft coupling, e.g., to an independently mounted pump or to a torque meter in a laboratory setting. Ensure proper alignment is maintained in all arrangements.

Use the driven equipment manufacturer's recommendations for aligning the motor with the fan drive or coupling. Tighten all bolts and nuts on the motor mount.

Motor rotation must be verified after electrical connection. Incorrect rotation can damage equipment.

5.3 Electrical installation

This section covers connection requirements, grounding, wiring guidelines, and control options for the Aircore EC+ motor.

5.3.1 Motor connection requirements

WARNING: Always disconnect power to the motor and practice all application specific safety procedures when installing, troubleshooting, or repairing a motor. Always verify power is secured with a multimeter prior to work. Failure to disconnect power from motors can result in serious personal injury or death and equipment damage.

WARNING: The rotor in this motor incorporates a Permanent Magnet (PM) design. When the rotor is rotated in a disconnected motor, voltage is produced. Do not touch unprotected terminals while the rotor is turning. Disconnect motor supply power and allow one minute for capacitors to discharge before servicing or replacing. Failure to comply with rotor safety procedures can cause serious injury or death and equipment damage.

WARNING: To reduce the possibility of personal injury or death and equipment damage, always make sure wire connections are secure and wires are in the correct location.

CAUTION: To prevent the possibility of motor damage, always use terminating ferrules for all supply wires. Terminating ferrules create a single connection point that is more secure than stranded wire.

Wire tensile forces can affect the point of termination during installation and motor operation. Terminal blocks with the correct wiring installed ensure safe motor operation. Using the correct wire gauge and amount of exposed conductor length with ferrules installed on each wire satisfies the requirements.

Make sure the source of power to the motor has been disconnected.

Strip wires and crimp on wire ferrules. Install each wire into the appropriate terminal block as provided in the wiring instructions. Verify all connections are tight and installed to specifications.

NEC 70 and NEMA MG2 standards should be followed for proper motor power wiring.

5.3.2 Motor control connections

Infinitum Aircore EC+ motors support the following standard industry control methods:

- Analog
- Modbus RTU
- BACnet MS/TP
- Modbus TCP or Modbus RTU for I-con

Infinitum provides its own configuration software, called I-con control software, for configuring and controlling motors.

5.3.3 Ground circuit verification

WARNING: Motors must be properly grounded. Adhere to all guidelines when installing the motor ground circuit. Failure to ground a motor can cause personal injury, death, and equipment damage.

It is advised to conduct resistance readings with a multimeter on the motor's ground circuit. Never apply power to a motor that does not have a complete ground circuit.

5.3.4 Grounding configurations

Infinitum Aircore EC+ motors can be installed in a Grounded Wye or Delta/HRG (High Resistance Ground) and Grounded Wye topology. Both are identified by their respective catalog ordering numbers.

5.3.5 Motor connection locations

Each of the circuit boards and housing components has a separate design function. Only two of the circuit boards have user inputs.

The main circuit boards and connection points are highlighted in Figure 7.

Figure 7: Main motor boards

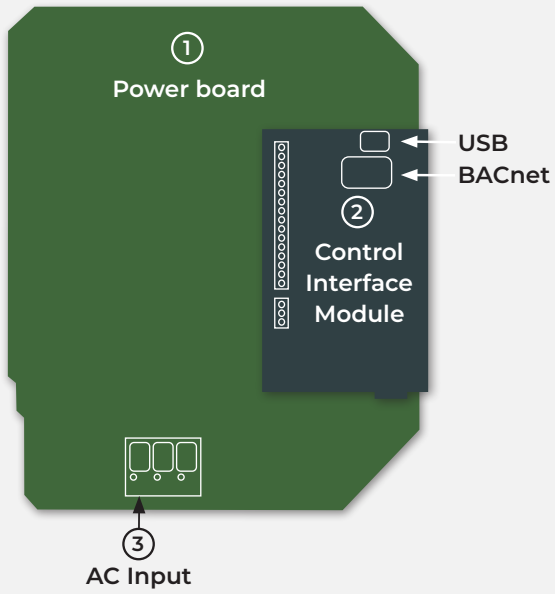

Note: Safety cover removed for illustration purposes.

1. Power board: Connections for three-phase supply. Rectifiers convert AC to DC for internal use on this board.
2. Control Interface Module (CIM). This circuit board contains advanced controls and communications.
3. AC Input: Ground terminal is in the chassis (Figure 7).

5.3.6 Connector size and terminal data

Board	Terminals	Maximum conductor size		Exposed conductor length	Terminal type
		mm^2	AWG		
Communication interface module (16-terminal)	Control terminals	1.3	16	8 mm	Spring terminal
Communication interface module (18-terminal)	Control terminals	0.52	20	9 mm	Spring terminal. One conductor per position, no solder-tinned wire.
Power board	AC Mains-U, V & W	5.2/3.3	10/12	12 mm	Spring terminal
Screw terminal	Earth ground	1.6	14	12 mm	Lug and screw (Max torque 2 Nm)

5.3.7 Circuit breaker and wire sizing

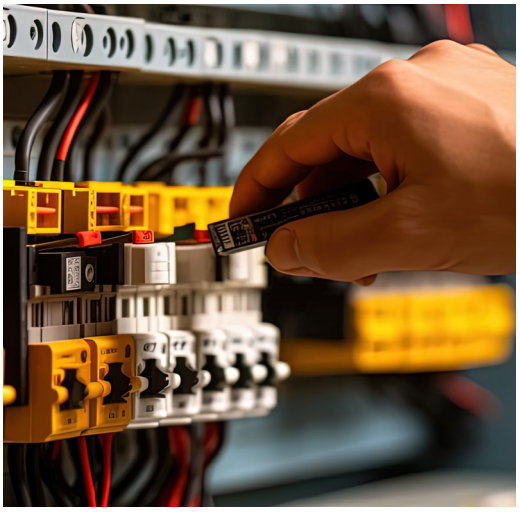

Short circuit protection should be provided to protect the input power conductors. UL and/or CSA (as required by local regulations) approved fuses (such as class CC or class J) or circuit breakers (UL 489) should be used and sized in accordance with applicable regulations or Tables 1 and 1a.

The supply conductors should be sized based on the current requirements of the motor. The connector minimum and maximum wire sizes are included in Table 2.

Overload protection is required for Infinitum motors marked as “Electronically Protected L.” UL and/or CSA (as required by local regulations) approved motor overload protectors should be used and set as required by local regulations. Combination motor controllers, such as UL Type E controllers, when used as intended, may be used to provide disconnect, short circuit protection, and overload protection in the same device.

The maximum permissible short circuit current at the drive input power terminals is 5kA.

Table 1: Breakers and fuses (3-phase 415/460 VAC (+/-10%))

Power (HP)	Rated current (A)	Listed/Certified fuses or breakers	Minimum suggested wire size (AWG)
5	6.0	10	16
7.5	9.0	15	14
10	12.0	15	14
15	17.0	20	12

Table 1a: Breakers and fuses (3-phase 575 VAC (+/-10%))

Power (HP)	Rated current (A)	Listed/Certified fuses or breakers	Minimum suggested wire size (AWG)
5	4.8	10	16
7.5	7.2	15	14
10	9.6	15	14

Table 2: Terminal connection data

	min.	max.
Rigid cable cross-section	0.2 mm²	6 mm²
Flexible cable cross-section	0.2 mm²	6 mm²
Cross section AWG	24	10
Wire-end ferrules (w/insulating collar)	0.2 mm²	4 mm²

5.3.8 Aircore EC+ control configurations

If the motor catalog number starts with AE, follow the instructions in section 5.3.8.1 to set up the control connections. If it starts with AM, skip to section 5.3.9 instead.

5.3.8.1 Control connections

Remove the VFD cover for access to Analog/Digital, Modbus, and (optional) BACnet connections.

⚠ CAUTION! Do not insert external wiring larger than 20 AWG into the control terminals.

The terminals on the interface board (Figures 8 and 8a) feature push-button spring clips. The push-button on each terminal must be depressed while inserting the wire. Releasing the push-button clips the wire in place.

1. Relay (1) – NO / NC (COM must be used)
   - Max voltage: 125 VAC / 30 VDC
   - Max current: NO-10A VAC, 5A
   - VDC: NC – 3A VAC or VDC
2. Digital input (4) – DIN1, DIN2, DIN3, DIN4
3. Digital output (2) – DO1 & DO2
   - Open drain output
   - ⚠ Max switching voltage: 40 VDC
   - ⚠ Max switching current: 350 mA
4. Auxiliary voltage (1) – +24 V (GND must be used), 250 mA max

Figure 8: 16-terminal CIO board

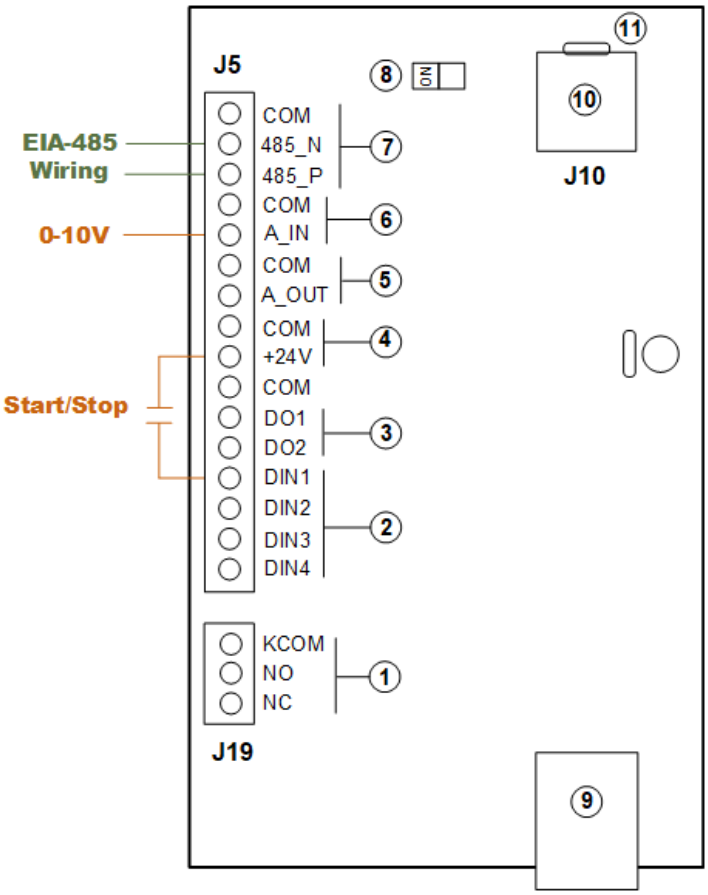

5. Analog output (1) – A_OUT (GND must be used) 10 V, 10 mA max
6. Analog input (1) – A_IN (GND must be used)
7. *EIA-485 interface (1) – 485P & 485N (Modbus RTU or BACnet MS/TP)
8. EIA-485 termination switch. (Default is Off)
9. RJ45 (Ethernet) for I-con control software connection
10. Optional BACnet module
11. USB

** NOTICE: Use a wirenut to connect shield wires. Do not tie to GRD.*

Figure 8a: 18-terminal CIO board

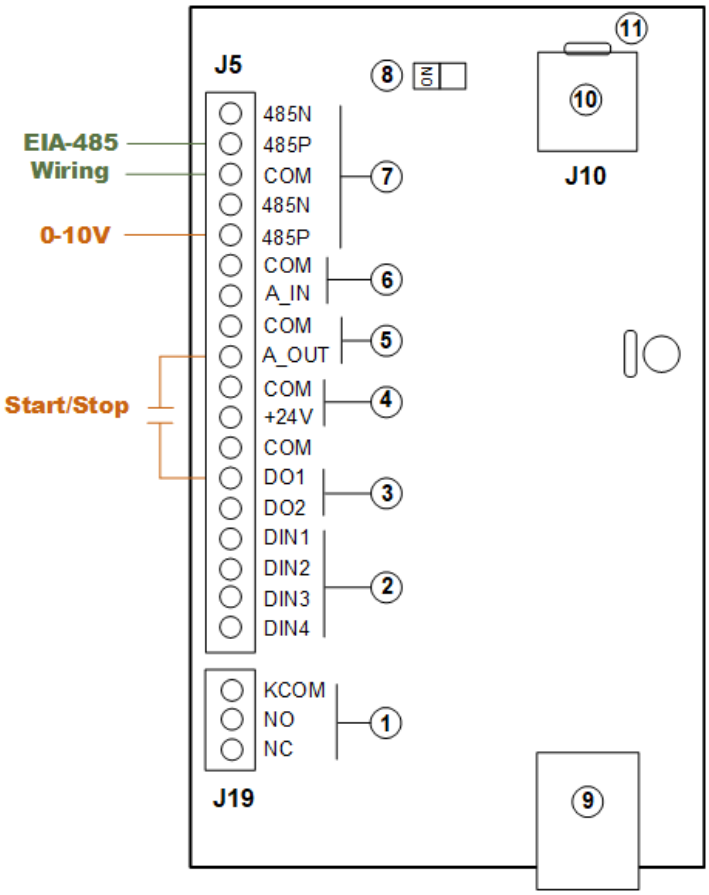

5.3.8.2 Analog control wiring guidelines

To control the unit using Analog control, please use the wiring guidelines on the CIM board (Figures 8 and 8a).

5.3.8.3 Modbus RTU or BACnet MS/TP wiring guidelines

To control the motor with Modbus RTU or BACnet MS/TP, use the wiring guidelines to connect to the Communication I/O (Figures 8 and 8a).

- The last unit on a daisy-chain Modbus RTU or BACnet MS/TP configuration should have the EIA-485 Termination DIP switch "ON".
- All other units must have the DIP switch in the "OFF" position.
- Modbus RTU operation requires changes to the motor configuration parameters for slave address. Refer to the Infinitum Aircore EC+ Parameters Guide for required changes.
- BACnet MS/TP operation requires changes to the Device Instance field to establish a unique BACnet identifier.

5.3.8.4 AC main input connections

The AC main inputs are on the power board.

The AC input terminals feature spring clips (Figure 9). The orange tab must be raised to insert the wire. Closing the orange tab secures the wire in place. The grounding post is located off the power board on the chassis itself.

The supply voltage connections are:

1. Supply voltage phase A
2. Supply voltage phase B
3. Supply voltage phase C

Figure 9: AC input terminals

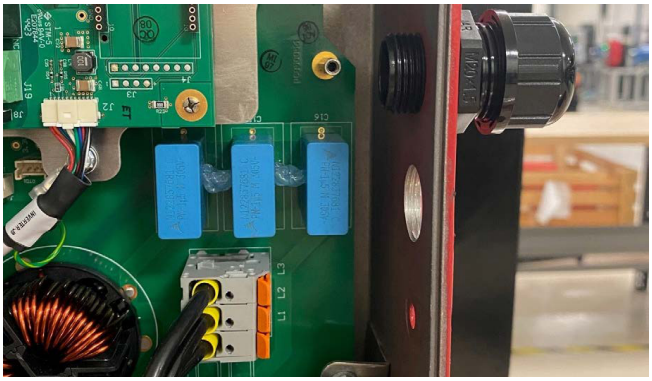

5.3.9 CIM-CIO AFE control configurations

Infinitum Aircore EC+ motors with catalog numbers starting with AM are pre-programmed with default settings optimized for AFE operation.

5.3.9.1 Control connections

Remove the VFD cover for access to Analog/Digital, Modbus, and (optional) BACnet connections.

⚠ CAUTION! Do not insert external wiring larger than 20 AWG into the control terminals.

1. Relay (1) – NO / NC (COM must be used)
   - Max voltage: 125 VAC / 30 VDC
   - Max current: NO-10A VAC, 5A
   - VDC: NC – 3A VAC or VDC
2. Digital input (4x) – DIN1, DIN2, DIN3, DIN4
3. Digital output (2x) – DO1 & DO2
   - Open drain output
   - ⚠ Max switching voltage: 40 VDC
   - ⚠ Max switching current: 350 mA
4. Auxiliary voltage +24 V (COM must be used), 250 mA max
5. Analog output – A_OUT (COM must be used) 10 V, 10 mA max
6. Analog input – A_IN (GND must be used)
7. *EIA-485 interface. Modbus RTU or BACnet MS/TP
8. EIA-485 termination switch. (Default is Off)
9. USB-C for I-con control software connection
10. Header for optional BACnet module
11. USB-C for BACnet module programming
12. Chassis terminal block

** NOTICE: Splice the shield wires and DO NOT connect to COM. Only connect the shield wires at one end of the daisy chain, preferably at the controller.*

Figure 10: CIO board

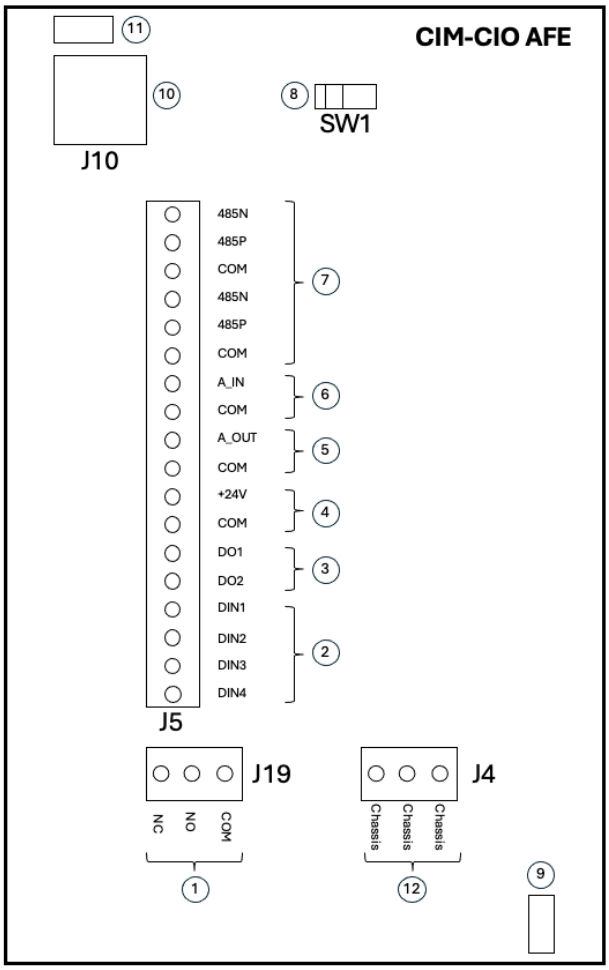

Figure 11: AC input terminals

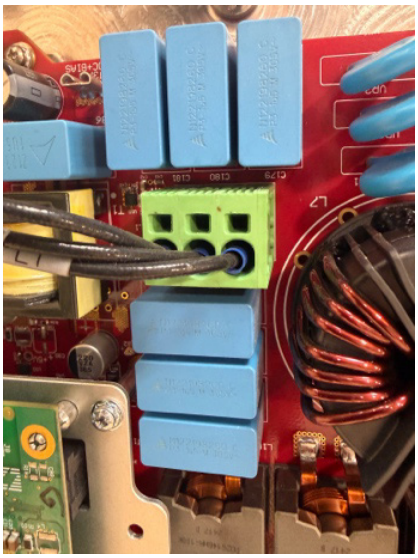

5.3.9.2 Analog control wiring guidelines

⚠ CAUTION! DIN1-DIN4 are limited to 24VDC input. A_IN is rated 0-10V @100mA max. Exceeding these voltages will permanently damage the communication board.

5.3.9.3 Modbus RTU or BACnet MS/TP wiring guidelines

The last unit on the EIA-485 daisy-chain configuration should have the EIA-485 termination DIP switch "ON".

All other units must have the DIP switch in the "OFF" position.

Modbus RTU and BACnet operation require changes to the motor configuration parameters (slave address, device instance). Refer to the BACnet user manual for BACnet MS/TP settings.

5.3.9.4 AC main input connections

Remove the VFD cover for access.

460, 3-phase, 60Hz power shall be provided to the unit utilizing the connection points on the AC main input (Figure 11).

5.3.10 LED operation

All Infinitum motors have 3 LEDs viewable on the outside of the VFD that indicate operational status (Figure 12):

Green: Normal operation, Mains AC input is active

Yellow: Blinking "heartbeat", Inverter is operational

Red: Fault or important user notification

Figure 12: Operational status LEDs

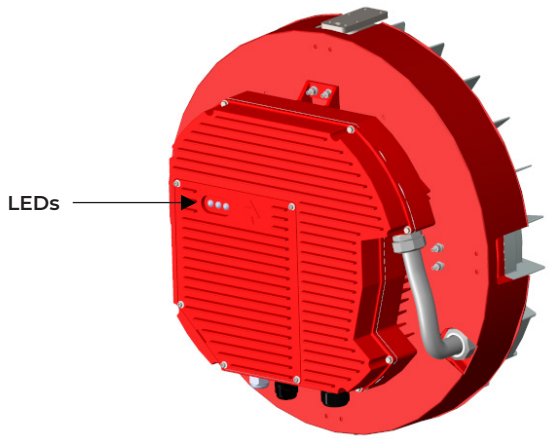

5.4 Motor testing

This section covers testing the motor's rotation and system operation when the motor is under load.

5.4.1 Check motor rotation

NOTICE: If the motor has been tested, and the technician has verified motor rotation prior to installation, the facility can elect not to perform this test because of redundancy.

Prerequisites: The motor has been installed, aligned, and electrically connected. The fan belt has been removed, or the coupling is disconnected. The motor must be briefly energized to check for proper rotation.

To check the motor rotation:

1. Review all installation instructions and all warnings prior to testing the motor.
2. Connect AC power.
3. Follow all safety precautions and energize the motor briefly to determine rotation. If the motor rotates opposite to the intended direction, switch the direction command utilizing the I-con control software tool.
4. Disconnect AC power.

5.4.2 Connect motor to driven equipment

WARNING: Always disconnect power and practice all safety procedures when installing, troubleshooting, or repairing a motor. Always verify power is secured with a multimeter prior to work. Failure to adhere to industry standard safety practices can result in serious personal injury or death and equipment damage.

Prerequisite: Motor rotation has been verified. The final series of steps will place the load on the motor and test system operation.

To test system operation:

1. Disconnect power from the motor.
2. Attach driven equipment confirming alignment.
3. Install all safety covers and connect power.
4. Start the system and verify that the motor operates properly.

5.5 Software control

Infinitum Aircore EC+ motors are shipped with factory default settings for maximum speed, control methods, and other values. To change your motor's settings, download the I-con motor control software manual.

Refer to section 3 of the I-con control software manual for information on firmware updates.

6 Maintenance

WARNING: Always disconnect power and practice all safety procedures when installing, troubleshooting, or repairing a motor. Always verify power is secured with a multimeter prior to work. Failure to adhere to industry standard safety practices can result in serious personal injury or death and equipment damage.

Regular servicing and visual examinations, performed at the suggested intervals, will help maintain the motor's performance and prevent potential issues.

6.1 Maintenance tasks

If the motor is operating in an environment susceptible to dust, dirt, corrosives, abrasive materials, or in an increased ambient temperature, use Table 3 to identify the level of severity and follow the recommended visual inspection frequency.

Maintaining this motor requires completion of both the visual inspection and the corrective maintenance tasks (if required). The basic tasks are outlined below.

Visual inspection

1. Examine mounting structure and rotating equipment for loose components or damage.
2. Inspect the motor output shaft for damage. Replace damaged components and tighten any loose set screws.
3. Make sure the cooling fins of the heat sink and the area around the motor are free from dust and debris.
4. Verify that the mounting bolts and hardware are tight and secure.
5. If used, check rubber vibration isolators for cracks and damage.
6. Make sure all external wire connections are tight.
7. Inspect external wires for signs of heat or physical damage.
8. Make sure there are no unusual sounds coming from the rotating parts such as bearings.

Table 3: Recommended Visual Inspection

Severity	Hours of Operation (Daily)	Maximum Temperature Exposure	Operating Environment	Recommended Visual Inspection Frequency
Standard	8	104°F (40°C)	Clean limited exposure to dirt/dust or corrosives.	4 to 6 months
Severe	>12	122°F (50°C)	Moderate exposure to dirt/ dust or corrosives.	1 to 2 months
Extreme	>12	122°F (50°C)	Consistent exposure to dirt, abrasive dust, corrosives, shock, or vibration.	1 to 2 weeks

If visual inspection identifies a non-compliance condition, follow the corrective maintenance as described below. Any non-compliance must be noted and resolved before placing the motor back into service.

Corrective maintenance

Any damage noted must be repaired before placing the motor in service.

1. If the access cover needs to be opened for further inspection, disconnect the motor line power and all associated motor operating equipment, and allow one minute for the motor capacitors to discharge.
2. Contact an authorized Infinitum representative for further investigation.

6.2 Mechanical issues

Problems with alignment can cause bearing wear. Lack of maintenance, improper installation, and loose mounting bolts can cause premature bearing wear and motor overload.

6.3 Windmilling

Infinitum Aircore EC+ motors can overcome “windmilling” (reverse rotation due to back pressure in HVAC applications) up to 200 RPM. In windmilling conditions under 200 RPM, the motor will stop reverse rotation and resume operations in the required operational direction. If the windmilling speed exceeds 200 RPM, alternative solutions are required, such as anti-windmilling devices like brakes, clutches, or louvers.

7 Drive parameters and data types

The Aircore EC+ motor parameters can be found on our support website.

8 Related documents

Infinitum Aircore EC+ Parameters Guide

QSG: Quick start guide for wiring overview

Infinitum Motor Selection Tool

BACnet user manual

I-con motor control software manual

Software and firmware download: resources

9 Troubleshooting guide

These instructions do not cover all variations in equipment, nor do they provide information for every possible condition in installation, operation, or maintenance. For additional information, contact Infinitum Support.

Motor troubleshooting and service must be performed by qualified personnel with proper tools and equipment. LOTO operations should be followed per company guidelines.

“Motor” refers to the motor system consisting of the motor and VFD.

When contacting Infinitum Support, please have the Save State and Statistics file available for further diagnostics. The Save State and Statistic files are obtained using the Infinitum I-con control software tool. For more details on how to obtain the Save State and Statistics file using I-con, refer to the I-con motor control software manual.

Issue	Observations	Probable Cause	Mitigation
Motor unresponsive/ fails to start	No LED status lights	No mains AC voltage	• Check incoming voltage. • If no incoming voltage, contact the site electrician. • Retry motor once voltage has been confirmed. • If voltage is confirmed go to next troubleshooting step.
	Nearby motors also inoperable	No mains AC voltage	• Check incoming voltage. • If no incoming voltage contact site electrician. • Retry motor once voltage has been confirmed. • If voltage is confirmed go to next troubleshooting step.
Motor fails to start with confirmed VAC	No LED status lights on motor	Internal failure	• Perform LOTO. • Remove VFD access cover on Gen2 or entire drive cover on Gen3 VFD. • Confirm connections for all internal wiring connections, particularly the mains AC line-in wiring and the cable from the Inverter board to CIO board. • Using a multimeter, determine continuity of the three fuses. • If any are open, record which one, initiate an RMA for the motor. • Close cover and try power again if no open fuses. • If no LEDs are lighted, initiate an RMA for the motor.
	Solid green LED, normal yellow heartbeat LED, no red LED: serial Modbus connection incomplete, grounded, or reverse polarity	Lack of external communication to the motor	• Correct the polarity. • Correct the ground/shield/drain by termination at the main RTU device with a contiguous, isolated run from end of line to end of line. • Remove any wrongful ground locations. • Verify each connection point or break for proper termination of the conductors along the daisy chain. • Verify the correct wire for the application is being used.
	Solid green LED, normal yellow heartbeat LED, no red LED: analog control unresponsive or incorrect motor speed	Incorrect signal voltage or incorrect I/O terminal connection	• The +24v terminal on the I/O board is OUTPUT in DC voltage only. • The digital input 1(DIN1) needs to receive 24v DC for the motor to start at minimum speed which can be set under Parameter Settings>Terminal Settings>AI1 Min Setting (%). • The analog input(A_IN) by default will accept 0-10v for 0-100% speed.
	Red LED Fault LED illuminated	Internal electrical issue	• Use MCS to determine fault, and Serial # for motor. • Photograph motor label and reach out to Infinitum Support for assistance.
No connection to Motor Control Software via TCP (Ethernet)	LEDs (green on, yellow flashing), No red LED	Incorrect motor operating mode	• Change MCS operating mode on upper left corner of home screen.
	LEDs (green on, yellow flashing). No red LED.	Incorrect IP address	• Confirm static IP address: 172 17 20 153 / 255 255 0 0

Issue	Observations	Probable Cause	Mitigation
I-con control software connects to motor, but motor won't start	Fault observed in upper right corner of MCS	Internal motor fault	• Create a save state to record the data. • Confirm the motor parameters are set to what is needed for the spec of the fans. • Record the state of the motor and the order of the faults as they are listed. • Refer to Fault Page on the Infinitum Support page for information. • Clear Faults with the MCS and see if the motor will restart at the Minimum RPM. • If the motor starts, then observe its operation for 15 mins listening and looking for any defects. • If the observation is ok, turn the motor to mid the full RPM for 10 mins each. • If the motor runs for both with no issues, then remove the laptop and return motor to service.
I-con control software connects to motor, but motor has Modbus or Serial communication issues	MCS connects to motor. No operation via Modbus or Serial	Cable or Board issue	• LOTO the motor at the mainline disconnect and follow your company procedure to ensure no power. • Check L1, L2, L3 on the motor after LOTO to confirm no power. • Are wires stripped properly and inserted into the terminal – Remove wires and re-seat to confirm. • Review boards and wiring inside of motor access panel to determine if anything looks burnt, unplugged, or out of place. • Contact Infinitum Support with any concerns. Pictures will help. • MAKE SURE MOTOR HAS POWER REMOVED AND LOTO – Then physically spin motor to see if it spins freely. • If there is resistance record it with a video and send to Infinitum Support. • If motor spins freely then remove the CIO 24V DC Comm wires and use a meter to check them. • Check all wires in the array of fans that are for the Modbus/ Comm. • Confirm shields are terminated where needed, solid connections are made, and wires are not pinched/ nicked anywhere. • It may be necessary to remove all connections and reset them back in the terminals/connectors. • It is very important to have good connections on the Modbus/ Comm side. • Make sure all motors in the array have the end of line jumper or end of line resistor installed per specs and only at the end of line. • Confirm all motors that are not end of line motors have the comm dip-switch in the off position. • Remove field wires for the Modbus Comm making sure the ends do not touch and are safely covered with tape or connectors. See Modbus RTU Troubleshooting Product Notice. • Install wires from USB to RS485 adapter in the Comm ports. • See if the motor will run using only the MCS and attached wires. • If YES then there is a field wire issue. • If NO then contact Infinitum Support for a new CIO board.
I-con control software connects to motor but not delivering 100% power	Motor is running, LEDs are normal (green ON, yellow flashing)	Power wiring, or Board issue	• Perform LOTO. • Remove VFD access cover on Gen2 or entire drive cover on Gen3 VFD. • Confirm connections for power connections, measure the mains AC line-in wiring for all three phases. • The motor will run even if one phase is lost.

Appendix

Technical specifications

General Information

Motor Technology	Axial Flux, PCB Stator
VFD Technology	Integrated, SiC based High Efficiency Drives
System Efficiency* (Motor + VFD)	89% to 93%
Rated Speed	1,800 to 4,200 RPM
Minimum Speed	100 RPM
Maximum Speed	120% Rated
Duty Cycle	Continuous
Service Factor	1.0
Cooling	TEFC
Thermal Protection	Electronically Protected (EP-L)
IP Rating	IP65
Mounting	Peripheral Mount C-Face 182-TC
Mounting Orientation	Horizontal Vertical

* Calculated

Ambient Conditions

Ambient Temp (Operation)	-13 F to 104 F (-25 C to 40 C) 2% Power Derate per 1 C up to 50 C
Ambient Temp (Storage)	-40 F to 185 F (-40 C to 85 C)
Altitude	0 ft. to 3300 ft. (0-1000 m) 9% Power Derate per 1000 m up to 2000 m
Humidity (Operation & Storage)	95% RH, No Condensation
Contamination (Operation & Storage)	No conductive dust

Electrical Information

Supply Voltage	415/460 VAC +/-10% 575 VAC +/-10%
Rated Amps*	6A-18 A
Maximum Voltage Imbalance	+/-3% Phase-Phase Voltage
Short Circuit Rating (SCCR)	5 kA
Insulation Class	MOT150 Class B
Grounding	Solid Grounding Wye High Resistance Ground (HRG)

Mechanical Information

Rotation	CW, CCW
Bearing (DE & NDE)	6206 Hybrid Ceramic
Grease	Permanent Mobil Polyrex
Rotor Inertia	0.49 kg.m^2
Grounding Brush	Included, DE

Control & Communications

Communication	
Download on the App Store	MODBUS TCP for I-con (Desktop or Mobile)
Analog Input	0-10 V, 4-20 mA
Analog Output	10V for Potentiometer
Digital Input	4x
Digital Outputs	2x
Relay	Analog Input
Aux Power	250 mA, 24 VDC

Certifications

UL 1004-7	UL 1004-1	UL 61800-5-1	CSA 22.2 N077

Motor dimensions

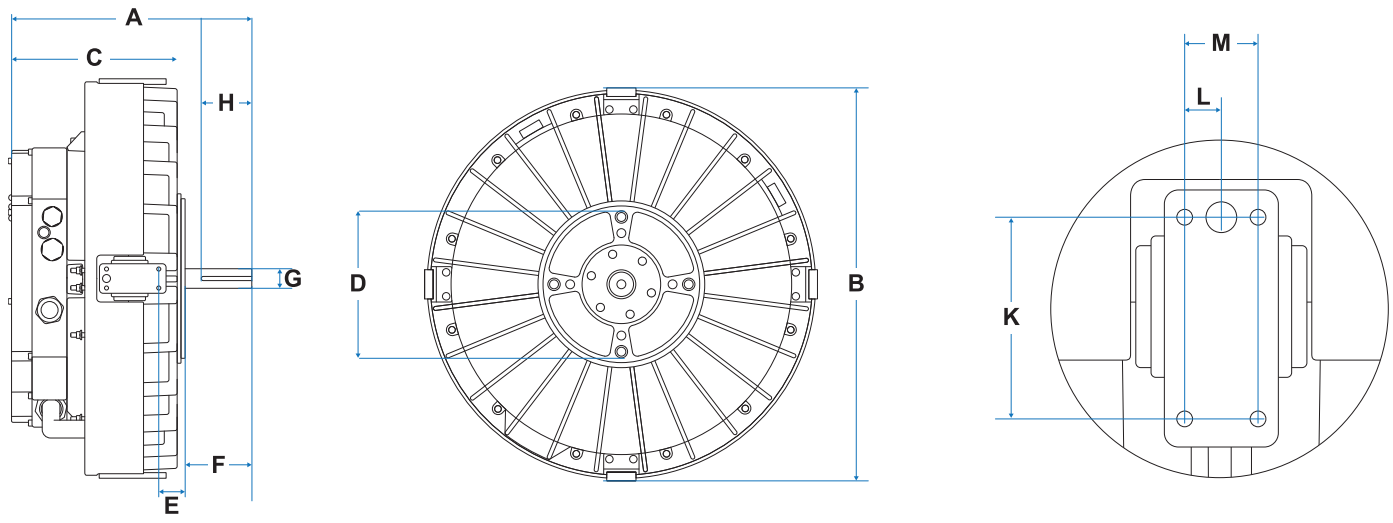

Table 4: Dimensions

Frame Sizes	A	B	C	D	E	F	G	H	K	L	M
AE20-X	313.9	537.3	224.8	184.1	34.5	82.7	28.6	60.0	69.9	12.7	25.4
AE18-X	309.0	472.0	220.6	184.1	29.4	82.1	28.6	60.0	69.9	12.7	25.4
AE15-X	311.9	417.3	221.6	184.1	36.2	82.3	28.6	60.0	69.9	12.7	25.4
AE13-X	318.0	367.8	230.7	184.1	33.1	81.0	28.6	60.0	69.9	12.7	25.4

All measurements in mm.

Note: Refer to the STEP files on the Infinitum website for the latest Aircore EC+ motor dimensions.

Infinitum

Office
12234 N IH 35 SB
Building B, Suite 100
Austin, TX 78753

Contact
info@goInfinitum.com
goInfinitum.com
support.goInfinitum.com

We reserve the right to make technical changes or modify the contents of this document without prior notice. Copyright© 2026 Infinitum Electric, Inc. All rights reserved.